2MP Vandal-resistant IR Fixed Mini Dome Camera

RS-IPC3N34P-I1KF2.8

Key Features

Optics

- Day/night functionality
- Smart IR, up to 15m (49ft) IR distance 2D/3D DNR (Digital Noise Reduction)
- Car-grade LEDs, brighter and uniform light compensation

Compression

- Ultra 265, H.264, MJPEG
- Triple streams
- ROI (Region of Interest) Customized OSD

Network

- ONVIF Conformance

Structure

- Wide temperature range: -35°C ~ 60°C (-31°F ~ 140°F)
- Wide voltage range of ±25% Built-in microphone
- IK10 vandal resistant IP66

- 3-Axis

Specifications

	RS-IPC3N34P-I1KF2.8				RS-IPC3N34P-I1KF4
Camera					
Sensor	1/2.9", 2.0 megapixel, progressive scan, CMOS				
Lens	2.8mm@F2.0				4.0mm@F2.0
DORI Distance	Lens (mm)	Detect (m)	Observe (m)	Recognize (m)	Identify (m)
	2.8	45	18	9	4.5
	4.0	64.3	25.7	12.9	6.4
Angle of View (H)	107.8°				82.0°
Angle of View (V)	56.7°				41.4°
Angle of View (O)	140.2°				100.9°
Adjustment angle	Pan: 0° ~ 90°		Tilt: 0° ~ 65°		Rotate: 0° ~ 360°
Shutter	Auto/Manual, 1 ~ 1/100000s				
Minimum Illumination	Colour: 0.005Lux (F2.0, AGC ON) 0Lux with IR				
Day/Night	IR-cut filter with auto switch (ICR)				
Digital noise reduction	2D/3D DNR				
S/N	≥52dB				
IR Range	Up to 15m (49ft) IR range				
Defog	Digital Defog				
WDR	DWDR				
Video					
Video Compression	Ultra 265, H.264, MJPEG				
H.264 code profile	Baseline profile, Main Profile, High Profile				
Frame Rate	Main Stream: 2MP (1920*1080), Max 30fps; Sub Stream: 2MP (1920*1080), Max 30fps; Third Stream: D1 (720*576), Max 30fps				
HLC	Supported				
BLC	Supported				
9:16 Corridor Mode	Supported				
OSD	Up to 8 OSDs				
Privacy Mask	Up to 8 areas				
ROI	Up to 8 areas				
Motion Detection	Up to 4 areas				
Audio					
Audio Compression	G.711				
Two-way audio	Supported				
Suppression	Supported				
Sampling Rate	8KHZ				
Storage					
Edge Storage	Micro SD, Up to 256GB				
Network Storage	ANR				

Network	
Protocols	IPv4, IGMP, ICMP, ARP, TCP, UDP, DHCP, PPPoE, RTP, RTSP, RTCP, DNS, DDNS, NTP, FTP, UPnP, HTTP, HTTPS, SMTP, 802.1x, SNMP, QoS
Compatible Integration	ONVIF (Profile S, Profile G, Profile T), API
Interface	
Audio I/O	audio cable
	Input: impedance 35kΩ; amplitude 2V [p-p]
	Output: impedance 600Ω; amplitude 2V [p-p]
Built-in Mic	Supported
Network	1 RJ45 10M/100M Base-TX Ethernet
General	
Power	DC 12V±25%, PoE (IEEE 802.3af)
	Power consumption: Max 4.5W
Dimensions (Ø x H)	Φ110x61mm (Ø4.3" x2.4")
Weight	0.25kg (0.55lb)
Working Environment	-35°C ~ 60°C (-31°F ~ 140°F), Humidity: ≤95%RH (non-condensing)
Ingress Protection	IP66
Vandal Resistant	IK10

Dimensions

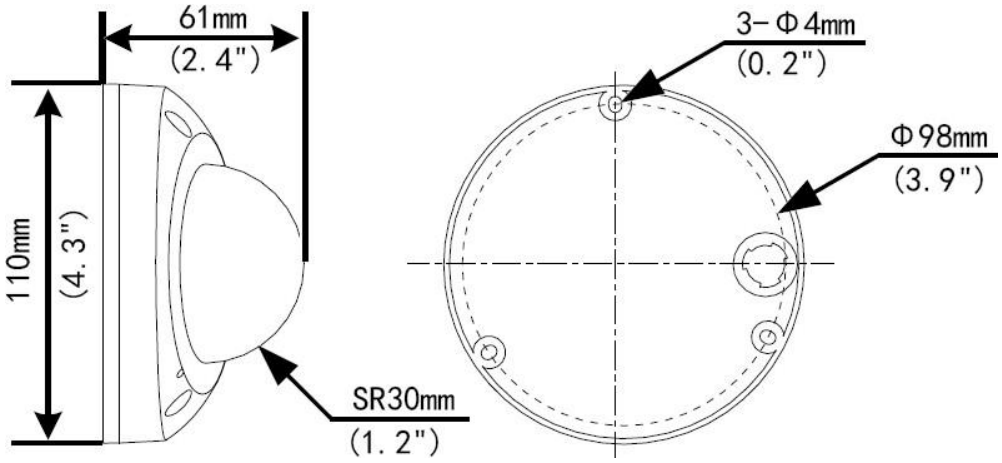

Royal Engineering Consultancy Pvt. Ltd
Web: https://royalshield.in
Email id :sales@royalshield.in
Mob No. 8377948862